THIS DRAWING AND SPECIFICATIONS, HEREIN, ARE THE PROPERTY OF DATA GENERAL CORPORATION AND SHALL NOT BE REPRODUCED OR COPIED OR USED IN WHOLE OR IN PART AS THE BASIS FOR MANUFACTURE OR SALE OF ITEMS WITHOUT WRITTEN PERMISSION

REVISIONS				
REV.	DESCRIPTION	DRFTG.	APP. BY	DATE
00	RELEASED PER ECO D339			
01	ECO D344	DD		
02	ECO D365A			
03	ECO # D345B			2/26/78
04	ECO # D394			4/26/78
05	ECO # E416			7/25/78
06	ECO # 8360	HB		11/28/78
07	ECO 8466	HB	GM	1/12/79

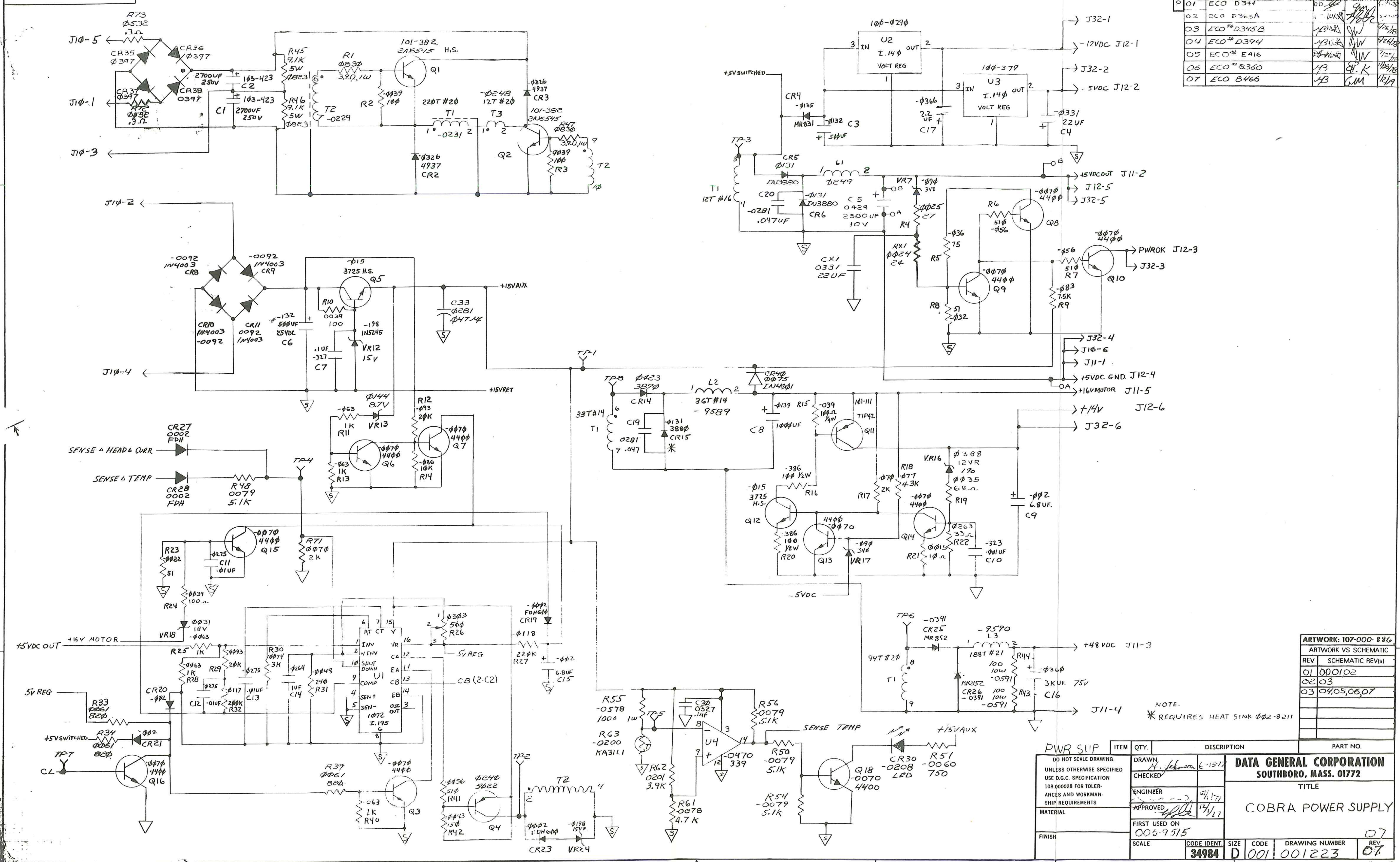

NOTE.
* REQUIRES HEAT SINK 002-8211

ARTWORK: 107-000-886	
ARTWORK VS SCHEMATIC	
REV	SCHEMATIC REV(s)
01	000102
02	03
03	04,05,06,07

PWR SUP

ITEM	QTY.	DESCRIPTION	PART NO.

DO NOT SCALE DRAWING.
UNLESS OTHERWISE SPECIFIED USE D.G.C. SPECIFICATION 108-000028 FOR TOLERANCES AND WORKMANSHIP REQUIREMENTS

MATERIAL

FINISH

DRAWN H. Johnson 6-15-77

CHECKED

ENGINEER 12/1/77

APPROVED 12/1/77

FIRST USED ON 005-9515

SCALE

DATA GENERAL CORPORATION
SOUTHBORO, MASS. 01772

TITLE

COBRA POWER SUPPLY

CODE IDENT.	SIZE	CODE	DRAWING NUMBER	REV
34984	D	001	001223	07

SHEET 1 OF 2

DRAWING AND SPECIFICATIONS, HEREIN, ARE THE [PROPE]RTY OF DATA GENERAL CORPORATION AND SHALL [NOT B]E REPRODUCED OR COPIED OR USED IN WHOLE OR [IN P]ART AS THE BASIS FOR MANUFACTURE OR SALE OF [IT]EMS WITHOUT WRITTEN PERMISSION

REV.	ECO.	REVISIONS			
REV.		DESCRIPTION	DRFTG.	APP. BY	DATE

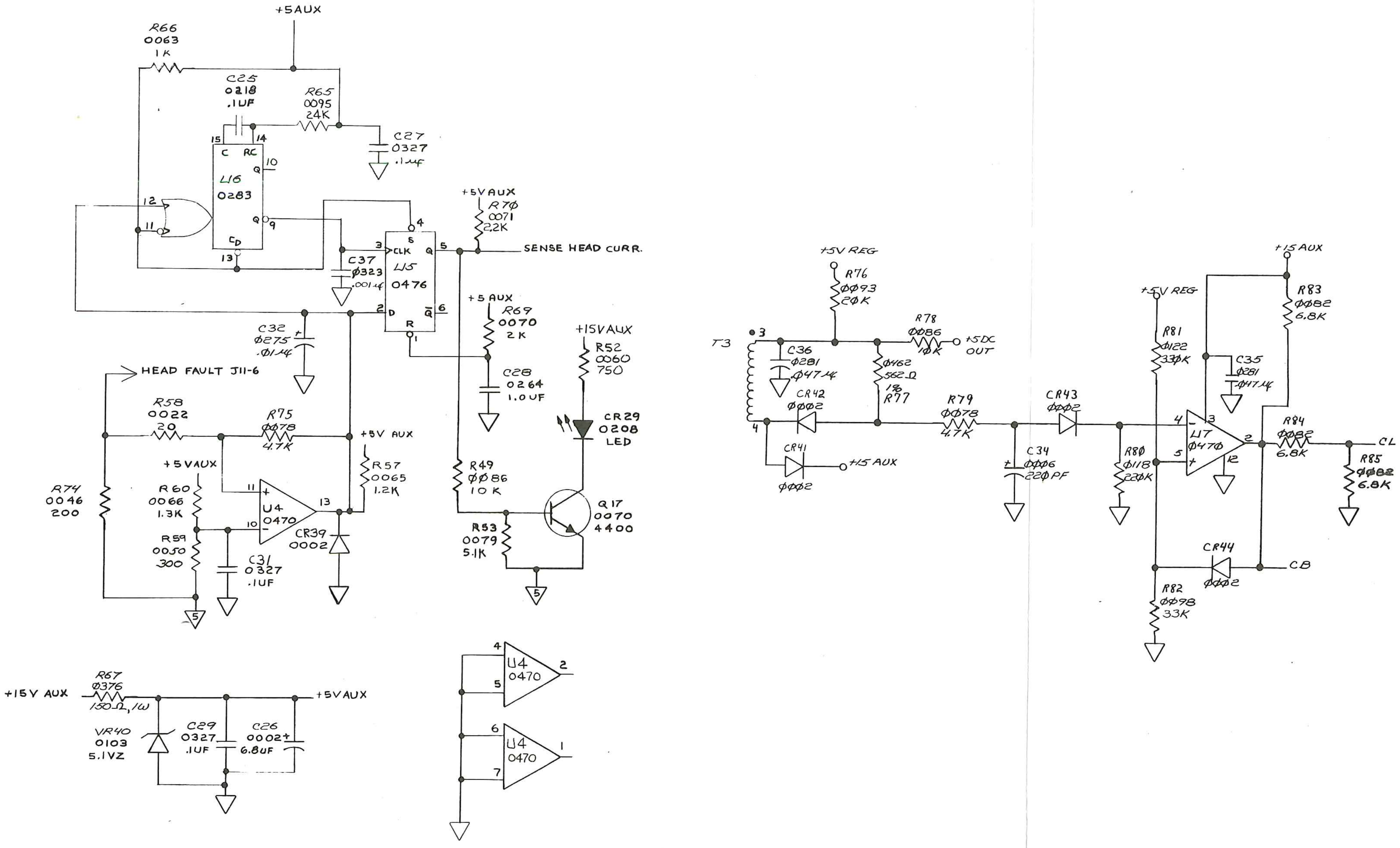

DO NOT SCALE DRAWING. UNLESS OTHERWISE SPECIFIED USE D.G.C. SPECIFICATION 108-000028 FOR TOLERANCES AND WORKMANSHIP REQUIREMENTS	ITEM	QTY.	DESCRIPTION	PART NO.
MATERIAL	DRAWN		DATA GENERAL CORPORATION SOUTHBORO, MASS. 01772	
FINISH	CHECKED		TITLE DASHER LP2 & TP2 POWER SUPPLY	
	ENGINEER			
	APPROVED			
	FIRST USED ON			
	SCALE	CODE IDENT. 34984	SIZE D / CODE 001 / DRAWING NUMBER 00 1223	REV. 07

SHEET 2 OF 2

BRUNING 40-526 20411-5

013000838